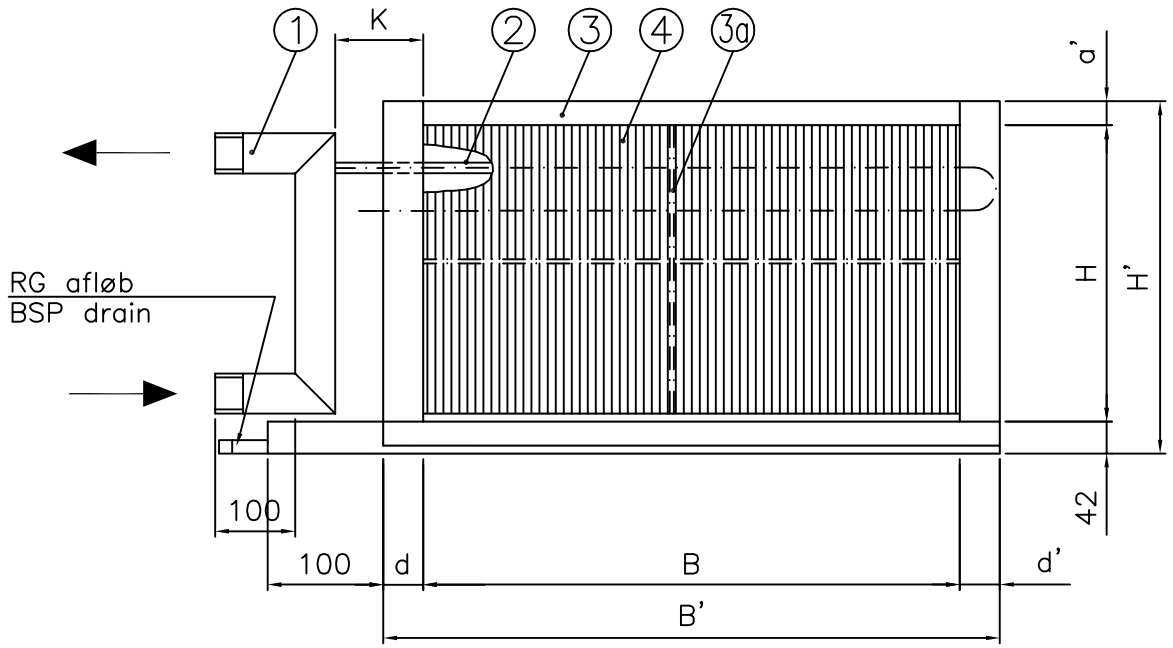

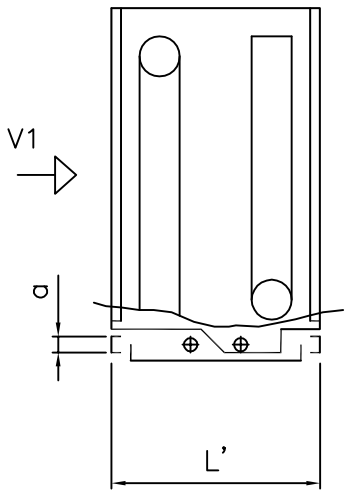

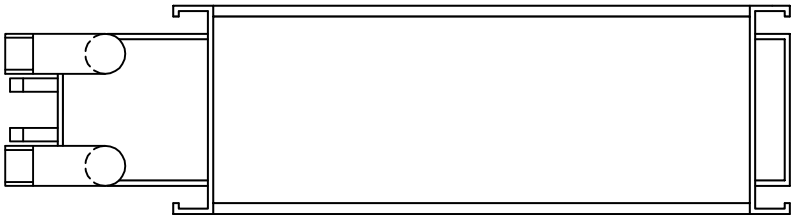

Sealing

Qty.: 1	Coil code: CW–ES–2,5–600–400–4R–6–V1–CU/AL								
B	B'±5	d±2	d'±2	H	H'±5	a±2	a'±2	L'±2	K
600	680	40	40	400	472	42	30	250	60

This drawing is not in scale.

Pos 1 Headers : CU
Pos 2 Tubes : CU
Pos 3 Casework : GALV.
Pos 4 Fins : AL

Air vent/Drain : ––
Frostsencor : ––

Flanges & Headers can be outside L'

Inlet dimension : 1" RG
Outlet dimension : 1" RG
Welding/Braze connections : ––
Welding flange DIN 2633 : ––
Loose flange DIN 2642 : ––
Threaded flange DIN 2566 : ––
Thread connections : YES

Order–no.:
Production no.:
Customer ref.:

Tegn. af/ Made by/ Gezeichnet/ PD
Kontr. af/ Approved by/ Gepr./ PD
Dato/ Date/ Datum: 30.03.11
Tegn.nr./Drawing no. Zeichnung Nr.: CW600400
Rev.